MORRISON®

PETROL BRUSHCUTTER

BC 430 BC 430E BC 430ERX

Owner's Manual

Important

Please read this Owner's Manual and the Express Warranty before using this product. The Warranty does not cover damage due to misuse or failure to follow the operating and installation instructions.

Keep the instructions in a safe place for future use.

www.morrisonoutdoor.com

Part Nº: 543695.A.0

Black Pantone 425C Pantone 1797C

Do not operate this machine before it has been assembled correctly and you have read and understood these instructions.

Keep these instruction in a safe place of future use

CONTENTS

SYMBOLS ON THE MACHINE 2

SYMBOLS IN THIS OWNERS MANUAL 2

PROPER USE 2

SAFETY PRECAUTIONS 3

BC430 PARTS LOCATION 4

NOTES OF TRANSPORTATION 5

ASSEMBLY 5

NOTES OF TRANSPORTATION 6

ASSEMBLY 6

FUEL 7

OPERATING 7

CUTTING WITH A NYLON HEAD 8

CUTTING WITH A BLADE 10

MAINTAINENCE 10

SPECIFICATIONS 13

RECOMMENDED CUTTER APPLICATIONS 14

SYMBOLS ON THE MACHINE

	Read Owners Manual
	Always use safety guard
	Choke closed
	Choke open
	Danger of Ricochet
	Keep all bystanders (especially children and pets) at least 1.5m away from the work area.
	This unit is not intended for use with a toothed saw type blade
	Continued movement of saw blade after cutting through log
	Wear safety gloves
	Wear safety boots
	Wear eye, ear, head protection

	A hazard from fire/flammable materials
	Guaranteed sound power level
	To reduce the rist of injury or damage, avoid contact with any hot surface
	Do not smoke when mixing fuel or filling fuel tank
	All relevant directives, which require the CE-marking and which are applicable for the product, are fulfilled
	RPM Decal Rotational direction and maximum speed of the shaft for the cutting attachment

SYMBOLS IN THIS OWNERS MANUAL

Threatened hazard or hazardous situation.
Not observing this instruction can lead to injuries or cause damage to property.

Important information on proper handling.
Not observing this instruction can lead to faults in the machine.

User information. This information helps you to use all the functions correctly.

NOTE:
This owners manual covers multiple models, some of the photos may not be correct for your model.

PROPER USE

For safety reasons, the Brushcutters are not to be used by children, young people under 16 years of age, or any other persons who are not acquainted with these directions for use.

Specific safety information Please read this safety information and the directions for use carefully and be sure to follow the instructions to the letter.

1. This machine should never be used for anything other than the purpose for which it has been designed.
2. Do not use this brush cutter when tired or drowsy or under the influence of medication or alcohol, or at any time when you may not be able to operate it safely.
3. Avoid running the engine indoors. The exhaust gases contain harmful carbon monoxide.
4. Never use the machine in the circumstances described below:
   - When the ground is slippery or when other conditions exist which might make your footing unsteady.
   - At night or in times of fog where it would not be possible to have a clear view of the cutting area.
   - During rain or electrical storms, during gale force winds or at any time when weather conditions might make use of the product unsafe.
5. Before using this product for the first time, get an experienced operator to show you how to use the machine.
6. When you are new to the machine, limit your work sessions to 30-40 minutes with a 10 minute break between, and a total working time of 2 hours per day. Accidents can be caused by tiredness and physical exhaustion.
7. Be sure to keep this manual handy so that you may refer to it later if any questions arise.
8. Always be sure to include this manual when selling, or lending, this machine.
9. Never allow children or anyone to use this machine if they cannot fully understand the directions given in this manual.

SAFETY PRECAUTIONS

1. Before beginning work, check the worksite carefully to see whether there are any obstacles to be removed or avoided and whether there are any potholes or obstructions which might cause you to lose your footing.
2. The area within a radius of 15m of the brush cutter should be considered a hazardous area into which no one should enter while the brush cutter is in use. If necessary, yellow warning rope or warning signs should be placed around the work area. When work is to be performed simultaneously by two or more persons, constantly be aware of the location of other operators to maintain a safe separation distance.
3. Make sure that there are no loose screws or bolts, fuel leaks or any other problems, which might result in unsafe operation. Be especially careful to check the blades and their fastening arrangements.
4. Never use blades that are bent, warped, cracked, broken or damaged in any way.
5. Always keep metal blades sharp by filing the cutting edges, particularly at the outer ends. There should be a radius at the inside end of the cutting edge.

6. Check the blade fastening bolt and be sure the blade turns smoothly without abnormal noise.

Proper safety precautions must be observed. Like all power equipment this unit must be handled carefully. DO NOT EXPOSE YOURSELF OR OTHERS TO DANGER Follow these general rules. Do not permit others to use this machine unless they are thoroughly responsible and have read, and understand the machine manual and are trained in its operation. This machine is not to be operated by children.

- Always use proper handles and shoulder strap when cutting
- Do not mix fuel in an enclosed room or near open flames. Ensure adequate ventilation
- Never remove the fuel tank cap while the engine is running
- Never start or run the engine inside a closed room or building Fumes from the exhaust contain dangerous carbon monoxide
- Never attempt to make engine adjustments while the unit is running and strapped to the operator. Always make engine adjustments with the unit resting on a flat, clear surface
- Do not lift the machine other than by the handle of the shaft
- Do not use the unit if it is damaged or poorly adjusted. Never remove the machine's guard. Serious injury to the operator or bystanders could result as well as damage to the machine
- Keep children away. Onlookers should be kept at a safe distance from the work area, at least 15 METER(50 FEET)
- Do not overreach. Keep proper footing and balance at all times. Do not run the unit while standing on a ladder or on any other unstable footing location
- Do not use the unit when you are tired, ill or under the influence of medication, drugs or alcohol
- Use nylon cutting head which is free of damage. If a stone or any other obstacle is hit, stop the engine and check the nylon cutting head. A broken or unbalanced nylon cutting head must never be used.

FOLLOW INSTRUCTION FOR CHANGING ACCESSORIES

- Never touch the nylon cutting head when ever the engine is running. If it is necessary to adjust the protector or nylon cutting head, be sure to stop the engine and confirm that the nylon cutting head has stopped running
- The engine should be turned off when the machine is moved between work areas
- Be careful not to hit the nylon cutting head against stones, or the ground. Unreasonable rough operation will shorten the life of the machine as well as create an unsafe environment for yourself and those around you
- Pay special attention to operation in the rain or just after the rain as the ground may be slippery
- When the machine is placed in storage for a long time, drain fuel from the fuel tank and carburetor, clean the parts, move the machine to a safe place and confirm that the engine is cooled down
- It is believed that a condition called Raynaud's phenomenon, which affects the fingers of certain individuals may be brought about by exposure to vibration and cold. Exposure to vibration and cold may cause tingling and burning sensations followed by loss of color and numbness in the fingers. The following precautions are strongly recommended because the minimum exposure which might trigger the ailment is unknown.
  Keep your body warm, especially the head, neck, feet, ankles, hands and wrists. Maintain good blood circulation by performing vigorous arm exercises during frequent work breaks and also by not smoking.
  Limit the hours of operation. Try to fill each day with jobs where operating the brush cutter or other hand-held power equipment is not required.

If you experience discomfort, redness and swelling of the fingers followed by whitening and loss of feeling, consult your physician before further exposing yourself to cold and vibration

- Always wear ear protection, as being exposed to loud noise for long time can result in diminished hearing or even loss of hearing. Total face and head protection must be worn to prevent bodily injury from either slipping or falling into shrubbery, branches,or bushes.
- Wear no-slip heavy duty work gloves to improve your grip on the brush cutter handle. Gloves also reduce the transmission of machine vibration to your hands

Before Starting the engine

1. Take a careful look around to make sure that there are no obstacles within a radius of 15m around the brush cutter.
2. Place the body of the brush cutter onto the ground in a flat clear area and hold it firmly in place to ensure that the blades will not contact anything when the engine starts.
3. Place the trigger grip in the START position when starting the engine. Do not start the engine at full speed. (See STARTING THE ENGINE, page 8.)
4. After starting the engine, if the blades continue to rotate when the trigger grip has been released to the idle position, turn off the engine and check that the trigger grip cable is functioning correctly.

KICKBACK SAFETY PRECAUTIONS
A dangerous reaction may occur if the spinning blade contacts a solid object. It is called kick back. As a result, the operator can lose control of the unit, resulting in a serious accident.

To avoid kick back, observe the following safety precautions:

1. Before beginning work, check your working area and remove any obstacles.
2. Grip your brushcutter only by the handles.
3. When using your brushcutter, always look closely at where you are cutting. If you need to look away, set the engine to idling speed.
4. When the engine is running, always keep the cutter head well away from your feet, and never lift it above waist level.

OPERATING SAFETY PRECAUTIONS

1. Grip the brush cutter firmly with both hands, using the correct\ hand positions. When not cutting, set the engine speed to idling.
2. Always be sure to maintain a safe footing while working.

3. Run the engine no faster than the speed required to cut cleanly.
4. If grass gets caught in the blade during operation, or if you need to check the unit or refuel the tank, always be sure to turn off the engine.
5. If the blade touches a hard object like a stone, immediately stop the engine and check the blade. If necessary, replace the blade by new one.

6. If someone calls out while you are working, always be sure to turn off the engine before turning around.
7. Never touch the spark plug or plug cord while the engine is running. Doing so may result in receiving an electrical shock.
8. Never touch the muffler, spark plug, or other metallic parts of the engine while the engine is running or immediately after shutting down the engine as serious burns may result.
9. Stop the engine when moving from one work location to another.

SAFETY MAINTENANCE

1. Perform the regular maintenance procedures described in this manual. Repair and maintenance procedures other than those detailed in this manual should be carried out only by an authorised service dealer.
2. Under no circumstances should you take apart the brushcutter or alter it in any way. Doing so can result in damage to the machine, and may negate the manufacturer warranty.
3. Always be sure to turn off the engine before performing any maintenance or checking procedures.
4. To prevent injury when sharpening, removing, or reattaching the blade, be sure to wear thick, sturdy gloves and use only proper tools and equipment.
5. When replacing the blade or any other parts, always be sure to use only genuine MORRISON spares.

NOTES OF TRANSPORTATION

1. If a metal cutting blade is fitted, wrap it with a cloth to cover the sharp cutting edges.
2. When transporting by car, fix the unit firmly using a rope. It is dangerous to transport the brushcutter by cycle or motorcycle.
3. When travelling distances or over rough roads, fuel may spill from the tank. To avoid this, empty the tank before the journey.

WORKING GEAR AND CLOTHING

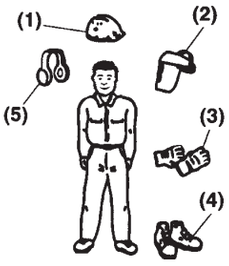

1. When using your brush cutter, you should wear long, close fitting trousers and protective equipment as follows.

(1) Helmet
(2) Protection goggles or face protector
(3) Thick work gloves
(4) Non-slip-sole work boots
(5) Ear protectors

2. You should carry with you the following things as appropriate.
   A. Reserve fuel
   B. A spare blade
   C. Something to indicate your working area. (Yellow rope, warning signs)
   D. Hatchet or saw (for removal of obstacles)
3. Never use your brush cutter when barefoot or in sandals or wearing trousers with loose cuffs.

FUEL HANDLING WARNING

1. The engine of this product is designed to run on a mixture of highly flammable petrol and oil. Do not store cans of fuel or refill the fuel tank in any place where there is a boiler, stove, wood fire, electrical or welding sparks, or any other source of heat or fire which might ignite the fuel.
2. Smoking while operating the brush cutter or refilling its fuel tank is extremely dangerous. Always be sure to keep lit cigarettes away from the brush cutter at all times.
3. When refilling the tank always turn off the engine first, wait for it to cool, and take a careful look around to make sure that there is nothing nearby which might ignite spilled fuel.
4. To avoid spilling fuel, always use a funnel when filling the fuel tank.
5. If any fuel spillage occurs during refuelling, use a dry rag to wipe up the spillage before starting the engine again.
6. After refuelling, screw the fuel cap back tightly onto the fuel tank and then carry the brushcutter to a spot 3m or more away from where it was refuelled before starting the engine.

BC430 PARTS LOCATION

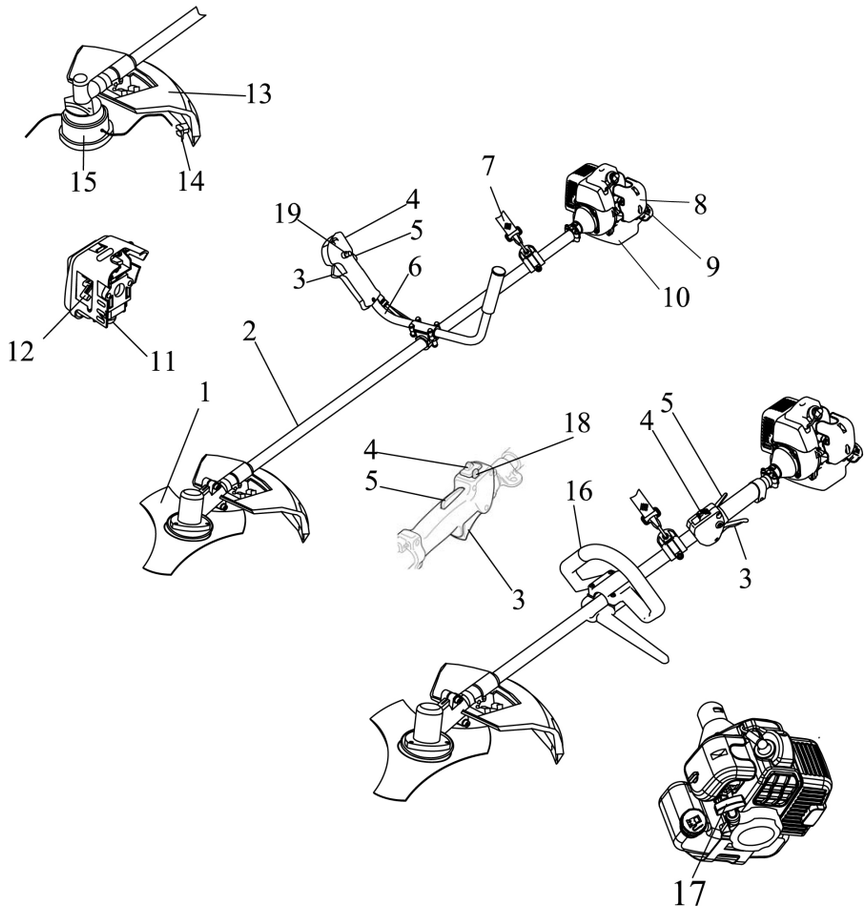

Tool List	
Tool	SPEC.
Socket Spanner	19
Hex Key	4/5

SAFETY MANUAL included with unit.
Read before operating and keep for future reference to learn proper,safe operating techniques.

DESCRIPTION

1. BLADE Circular blade for grass,weed or brush cutting applications. Harness, plastic shield and U-Handles required for blade operation
2. DRIVE SHAFT ASSEMBLY Contains a specially designed inner flexible drive shaft.
3. THROTTLE TRIGGER Spring loaded to return to idle when released. When accelerating,press trigger gradually for best operating technique .Do not hold trigger while starting.
4. IGNITION SWITCH Move switch forward to stop, back to start.
5. THROTTLE LOCKOUT Before acceleration, compress it please.
6. U-HANDLE this handle can be adjusted at you convenience for comfort.
7. HARNESS ASS'Y a attachment which hang the machine on the operator and adjustable in length.
8. AIR CLEANER COVER Contains replaceable felt element.
9. FUEL TANK LID
10. FUEL TANK Contains fuel and fuel filter
11. Priming Bulb Presing the priming bulb pumps(7 to 10 times before starting), will remove all air and stale fuel from fuel system and bring fresh fuel to the carburetor
12. CHOKE the choke control is located on the top of the filter cover. COLD STARTS Pull lever up to close choke for cold starts.push lever down for RUN position
13. DEBRIS SHIELD Mounted just above the cutting attachment .Helps protect operator by deflecting debris produced during the trimming operation .Do not operate unit without shield.
14. CUT-OFF KNIFE Trims nylon filament to the correct length-7" ,head to end of line-when nylon trimming head is bumped on the ground during the operation of advancing the line.If trimmer is operated without a cut-off knife the line becomes too long(more than 7") the operating speed will slow down the engine,this will overheat or damage the engine.
15. NYLON CUTTER HEAD Contains replaceable nylon trimming line that advances when the trimmer head is tapped against the ground while the head is turning at normal operating speed.
16. HANDLE ASS'Y "D" grip handle can be adjusted at your convenience for comfort.
17. STARTER HANDLE pull handle until engine starts,then return handle slowly.DO NOT let handle snap back ,if not,starter will be damaged
18. Throttle lock

WARNING!
Before using the product, Please Confirm the local laws and regulations no limit to this kind of product or the product can meet the requirements of local laws and regulations

ASSEMBLY

INSTALLING THE HANDLE

Install handle and lower cap on the rubber cover, and tighten four M5x35 screws.

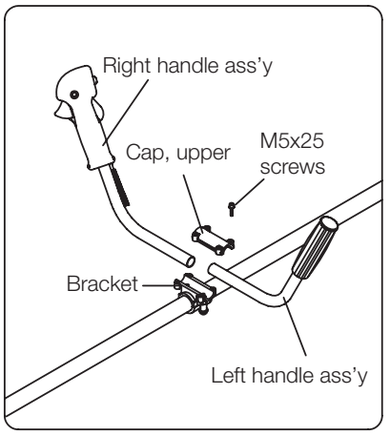

WARNING!
Do not attempt to disassemble the two special screws. The two clamps position has been adjusted at a suitable place,do not attempt to remove or move them. Otherwise,it can result in serious personal injury.

INSTALLING PLASTIC SHIELD

Install the safety cover on the shaft with the safety cover bracket and the screws provided.
Tighten the screws after setting the safety cover bracket at the appropriate position.

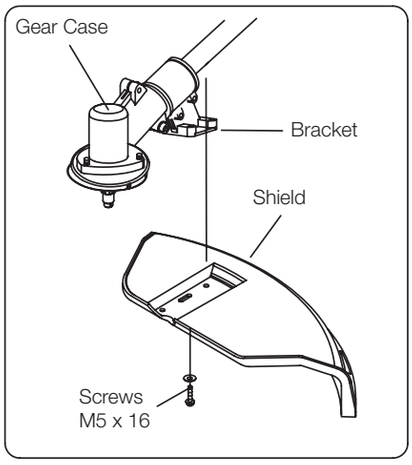

WARNING!
Do not operate this unit without a saftey guard, if the safety guard is damaged replace immediately, Do not continue with a damaged guard.

INSTALLING THE BLADE

Install holder A, the tri-blade, holder B, and teeth washer, in this order, and then clamp with a left-hand thread net.

Align hole of gear case and holder A, and insert S=4mm bar wrench. Rotate blade-fastening nut with plug box wrench in counter clockwise direction until securely tightened.

Install the pin 2x6 and disjoin it.

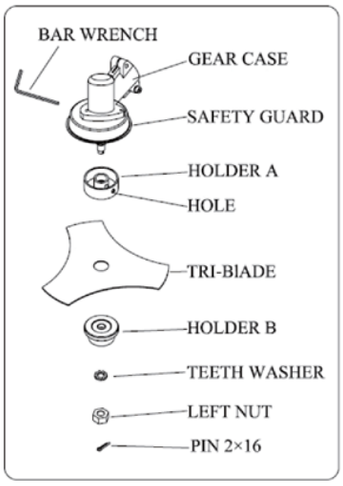

WARNING!
EXCESSIVE VIBRATION - STOP ENGINE IMMEDIATELY
Excessive vibration of the blade means that it is not properly installed. Stop engine immediately and check blade. Blade not properly installed can cause injury.
Use only original cutting equipment parts when servicing the unit.

HEAD LINE INSTALLATION

- Insert the hex key (2) into the specific hole in the angle transmission (3) and rotate the cutting line head (1) by hand until the hex key enters the inner hole, blocking rotation.
- Ensure that the grooves in the inner ring-nut (4) mach up perfectly with the angle transmisson(3).
- Fit the cutting line head (1) screwning it up in an anticlockwise direction.
- Remove the hex key (2)

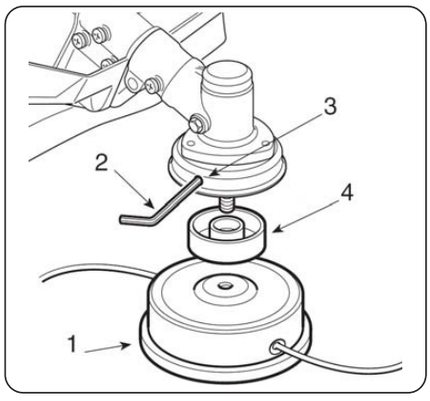

WARNING!
INSTALLING NYLON LINE CUTTER HEAD
Align hole in adapter plate with hole in shaft and install locking tool. Thread cutter head onto shaft (turning it clockwise) until it is tight. Remove locking tool.

INSTALLING THE NYLON CUTTER HEAD

Align hole in adapter plate with hole in shaft and install locking tool.
Thread cutter head onto shaft (turning it clockwise) until it is tight. Remove locking tool.

FUEL

1. Petrol is very flammable. Avoid smoking or bringing any flame or sparks near fuel.
2. Wipe up all spills before starting the engine.

3. Stop the engine and allow it cool before refuelling the unit.
4. Keep open flames away from the area where fuel is handled or stored.

5. Use only oil intended for 2 stroke air cooled engine use. Other oils can cause spark plug fouling, exhaust port blocking, or piston ring sticking.

6. Fuel mixtures which have been left unused for an extended period may clog the carburettor or cause hard starting. Store unused fuel in an air-tight container in a cool place.
7. Mix a regular grade petrol (leaded or unleaded) and a good quality two stroke engine oil for air cooled engines. Shake them together in a clean container to ensure thorough mixing before pouring into the fuel tank. Do not use plastic containers not specifically designed for use with petrol.

8. Mixing ratio chart

Unleaded Gasoline	2 cycle mineral oil 25:1	2 cycle semi-synthetic oil 40:1	2 cycle synthetic oil 50:1
1 L	40mL	25mL	20mL
4 L	160mL	100mL	80mL
5 L	200mL	125mL	100mL
10 L	400mL	250mL	200mL

OPERATING

STARTING THE ENGINE

Before starting the engine, inspect the entire unit for loose fittings or fuel leaks, and verify that the cutting attachment is properly installed and securely fastened.

Place the unit on a flat, firm place. Keep the cutting head clear of any obstructions.

1. Check that there is fuel in the tank and that the fuel cap is screwed on tightly.
   (1) Cap
   (2) Fuel tank

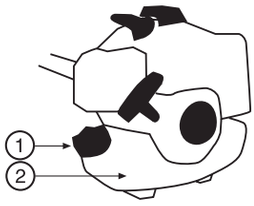

Diagram .A

2. When starting a cold engine move the choke lever (behind the air cleaner cover) to the closed position.
   (1) Choke lever
   (2) Closed
   (3) Open

Diagram .B

3. If the engine has been running and is still warm, move the choke lever to the open position.
4. Press the priming bulb under the carburettor repeatedly until excess fuel can be seen returning to the tank through the clear fuel return pipe.
5. Slide the ignition switch (3) on the trigger grip away from the STOP position (See Diagram .C on the next column).
6. To set the throttle in the start position.
   - Depress the safety lever (4)
   - Squeeze the throttle lever (1) fully.Hold down the starting button (3) while releasing the throttle lever.
   - The throttle lever will be held partly open until it is squeezed again.

(1) Throttle lever
(2) Ignition Switch
(3) Starting button.
(4) Safety Lever

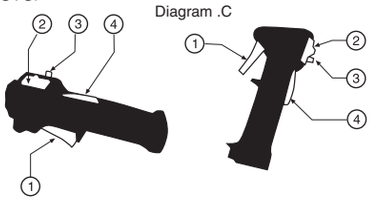

7. While holding the unit firmly, pull out the starter rope quickly.
8. After the engine has started, open the choke gradually.
9. Allow the engine to run for 2 to 3 minutes to warm up before starting work.

STOPPING THE ENGINE

1. Release the throttle lever.
2. Slide the ignition switch on the trigger grip to the STOP position.

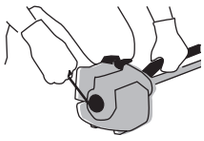

FITTING THE HARNESS

The harness must always be used as the machine cannot be operated safely without it.

1. Fit the horseshoe shaped plastic shoulder pad around your neck (open end of pad facing forward), and slide your arms through the side loops. The small rectangular belt cushion will be at your left side and the larger pad and hook clip will be on your right.
2. Adjust the various belt clips as necessary and fasten the buckle across your waist.
3. Before starting the engine for the first time, try hooking the hook clip into the various holes in the hanger along the top of the main tube to find out which hole gives the best machine balance.
4. Adjust the length of the strap holding the hook clip to achieve the correct angle between the ground and the cutting head. Note that the entire main tube of the machine can rotate to help achieve the correct cutting posture.
5. Unhook the clip before starting the engine.

QUICK-RELEASE MECHANISM

1. 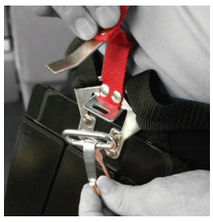
2. 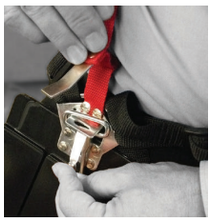
3. 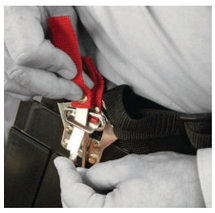
4.

Above images illustrate how to use quick release mechanism

- In an emergency, release the throttle trigger and shut off the Above images illustrate how to use quick release mechanism engine. Support the machine with your left hand and operate the quick-release mechanism. Be aware that the machine will fall and a rotating blade or nylon trimmer can cause death or severe injury.

WARNING!
Be careful not to accidentally operate the quick release on the harness. Be aware that the machine will fall and that a rotating blade or nylon trimmer can cause death or severe injury.

CUTTING USING THE METAL BLADE

(1) For shrubs & thick weeds
(2) For grass and weeds
(3) Direction of cutting
(4) Direction of rotation

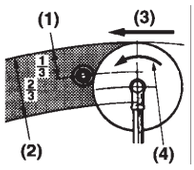

1. A metal blade cuts best with a swathe up to one third of the cutter diameter. Use that area for cutting shrubs, tough and thick weeds. For cutting young grass, you can use up to two thirds of the cutter diameter.
2. Adjust the engine speed according to the material being cut. Cut the young grass at middle speed, and shrubs or tough and thick weeds at high speed.

If the cutting speed is too low, debris can be caught up in the blade, and if this causes the clutch to slip it will wear out quickly.

CUTTING WITH THE NYLON CUTTER

- **Cutting with the nylon cord consumes more power so the engine speed should be 50% greater than when using the metal blade.**
- The nylon cord cuts the grass by meeting it at high speed. If you take too wide a swathe you may slow down the engine and not get clean cutting. To correct this, retract the cutter from the grass until the engine regains full speed and then cut using a narrower swathe.
- After a time the nylon cord will wear away. To restore the full cutting diameter, simply bump the cutter head on the ground while it is running at full speed. The cords will extend automatically and will be trimmed to the correct length by the cord trimmer blade mounted on the guard.
- **Cut grass by swinging the brushcutter from left to right**. While you can cut in either direction, if you follow these suggestions the cut grass will be thrown away from you, and you will avoid getting your clothes dirty.

CUTTING WITH A NYLON HEAD

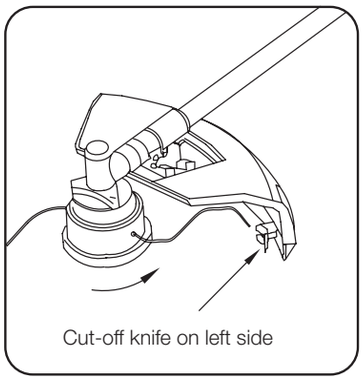

Line head rotates in a counter CLOCKWISE direction.The CUT-OFF KNIFE will be on the right side of the debris shield.

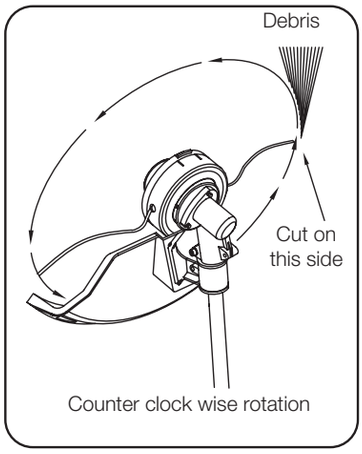

WARNING!
The proper debris shield must be in place on the unit when nylon cutting line is used. The cutting line can flap around if too much line is exposed. Always use the plastic debri shield with cut-off knife when using nylon cutting heads.

For nearly all cutting, it is good to tilt the line head so that contact is made on the part of the line circle where the line is moving away from you and the debris shield. (See appropraite picture) This results in the debris being thrown away from you.

WARNING!
Tilting the head to the wrong side will shoot the debris TOW ARDS you.If the line head is held flat to the ground so that cutting occurs on the whole line circle, debris will be THROWN at you, drag will slow the engine down, and you will use up a lot of line.

WARNING!
Use only quality nylon monofilament line of the diameter 2.5mm. Never use wire or wire-reinforced line in place of nylon trimmer line. Load your nylon line cutting head only with nylon trimmer line of the proper diameter.

WARNING!
Use extreme caution when operating over bare spots and gravel,because the line can throw small rock particles at high speeds. Debris shields on the unit cannot stop objects which bounce or ricochet off hard surfaces.

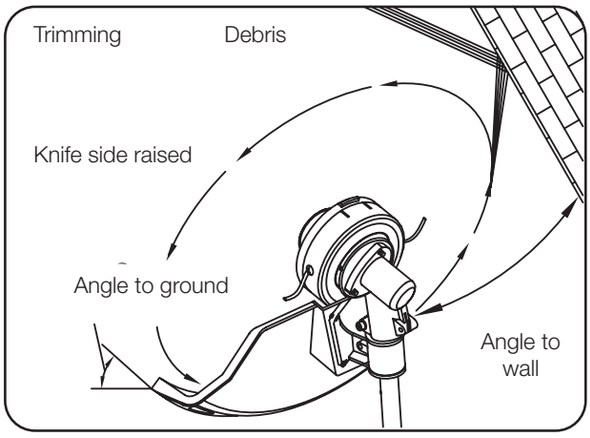

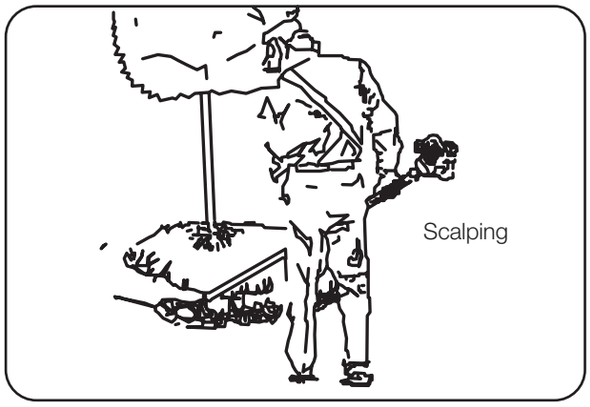

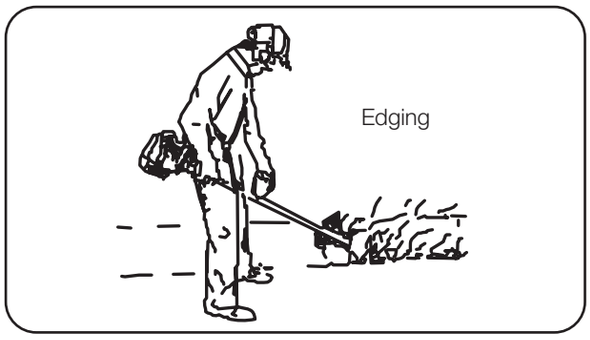

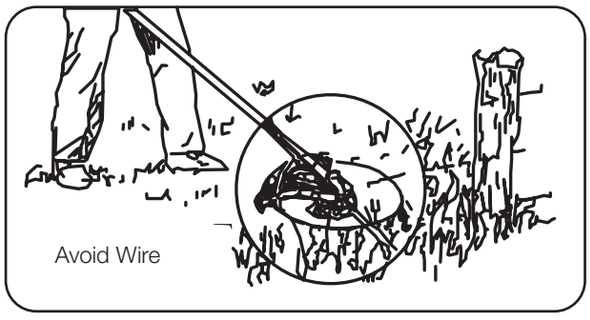

TRIMMING
This is feeding the trimmer carefully into the material you wish to cut.Tilt the head slowly to direct debris away from you. If cutting up to a barrier such as fence, wallor tree,approach from an angle where any debris ricocheting off the barrier will fly away from you. Move the line head slowly until the grass is cut right up the barrier, but do not jam(overfeed)the line into the barrier. If trimming up to a wire mesh or chain linked fence be careful to feed only up to wire. If you go to far the line will snap off around the wire. Trimming can be done to cut through weed stems one at a time. Place the trimmer line head near the bottom of the weed-never high up which could cause the weed to chatter and catch the line. Rather than cut the weed right through, just use the very end of the line to wear through the stem slowly.

WARNING!
Do not use a steel blade for edging or scalping.

SCALPING & EDGING
Both of these are done with the line head tilted at a steep angle Scalping is removing top growth leaving the earth bear. Edging is trimming the grass back where it has spread over a sidewalk or drive way. During both edging and scalping, hold the unit a steep angle and in a position where the debris, and any dislodging dirt and stones, will not come back towards you even if it ricochets off the hard surface. Although the picture shows how to edge and scalp every oprator must find for himself the angles which suits his body size and cutting situation.

WARNING!
Do not trim in any area where there are strands of fencing wire. Wear protective safety protecting, Do not cut where you cannot see what the cutting device is cutting.

CUTTING WITH A BLADE

CUTTING WITH A BLADE
There are many different types of blades, however the two most commonly used are the following.

BRUSHBLADE is used for cutting brush and weeds up to 3/4” in diameter. Only CG420-2 255mm 3-blade can be used in this type of brush cutter.

WARNING!
Do not touch these types of objects with blade

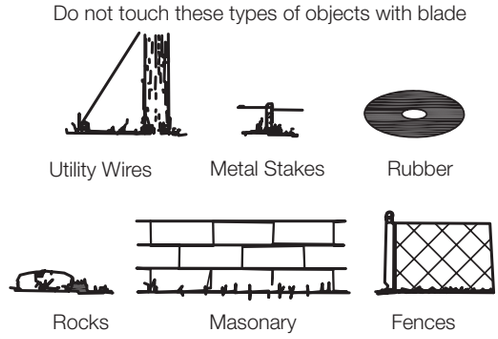

WARNING!
Do not use a brushcutter for cutting trees.

WARNING!
Do not cut with dull, cracked or damaged metal blade. Before cutting growth, inspect for obstructions such as boulders, metal stakes or strands of wire from broken fences. If an obstruction cannot be removed, mark its location so that you can avoid it with the blade. Rocks and metal will dull or damage a blade. Wires can catch on the blade head and flap around or be thrown into the air.

Blade thrust is the reaction which may occur when the spinning blade contacts anything it cannot cut. This contact may cause the blade to stop for an instant, and suddenly “thrust” the unit away from the object that was hit. This reaction can be violent enough to cause the operator to lose control of the unit. Blade thrust may occur without warning if the blade snags, stalls or binds. This is more likely to occur in areas where it is difficult to see the material being cut. For cutting ease and safely, approach the weeds being cut from the right to the left,in the event that an unexpected object or woody stock is encountered, this could minimise the blade thrust reaction.

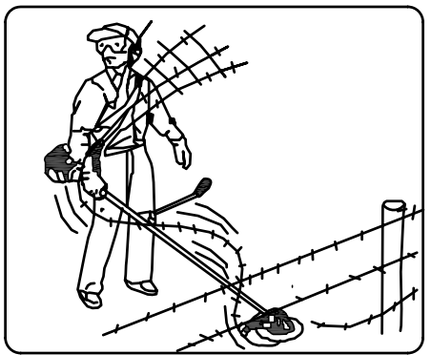

SCYTHING WEEDS. This is cutting by swinging the blade in a level arc. It can quickly clear areas of field grass and weeds. Scything should not be used to cut large, tough weeds or woody growths.

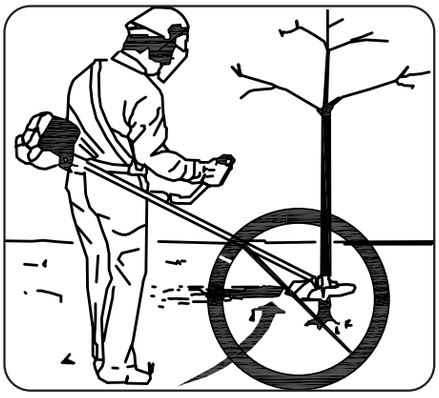

NOTE
Do not use a brush blade to cut trees which exceed a diameter of 1/2 to 3/4 inches.

Scything can be done in both directions, or just in one way which results in the debris being thrown away from you.

That is using the side of the blade that it is rotating away from you. Tilt down the blade slightly on this same side .You will be hit by some debris if you scythe in both directions.
Do not force the blade to cut. Do not change the angle of cut after into the wood. A void using any pressure or leverage which could cause the blade to bind or crack.

MAINTAINENCE

BLADE

- Sharpen each cutting edge and make sure the inside corner is rounded to reduce the risk of cracking.
- Do not quench the blade with water if you are using a grinder as it may start cracks in the blade.
- The 3 tooth blade may be inverted to utilise a fresh set of cutting edges.

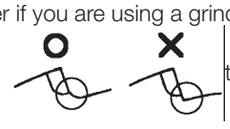

NYLON CUTTERS
The spools of nylon cord inside these bump-feed cutter heads will eventually need replacing. Replacing the nylon cord (Fig 12)
Check thoroughly if the nylon head is worn out before replacing the cord. If you can see serious traces of wear, you must replace the complete nylon head.

1. Stop the engine.
2. Turn rotary knob (12/1) until the arrows (12/2, 12/3) are alighned
3. Push the cutting line into opening (12/4) until the line is the same lenght on both sides of the spool head.
4. Wind cutting line into spool head: Turn rotary knob (12/1) in the direction of arrows (12/5) until the cutting line protrudes by approx. 10 cm from the spool head on both sides.

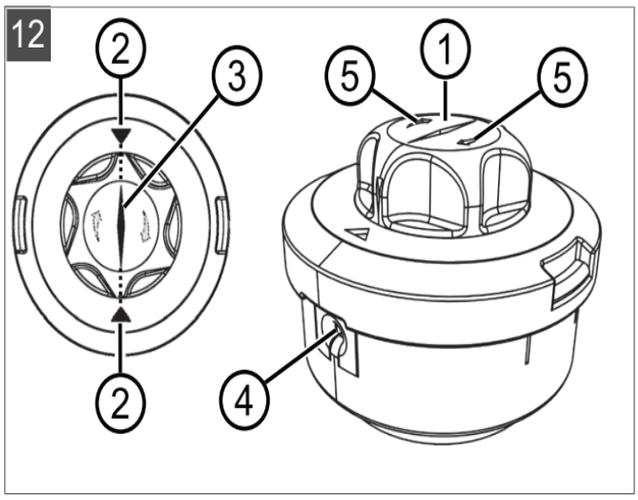

AFTER 25 HOURS USE

AIR CLEANER

Check the filter element and clean it in warm, soapy water as required. Dry completely before installing. If the element is broken or shrunk, replace with a new one.
(1) Air Cleaner element.

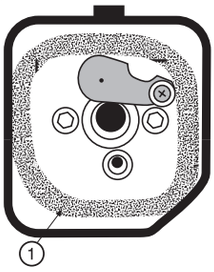

A clogged air filter will increase fuel consumption and cut down the engine power.

If you operate the brushcutter without the air filter or with a deformed filter element it will quickly ruin the engine.

FUEL FILTER

Take the filter out of the fuel tank using a small wire hook. Disconnect the filter assembly from the fuel pipe and unhook the retainer to disassemble it. Clean the components with petrol.

A clogged fuel filter will reduce the power of the engine.

SPARK PLUG

Remove and inspect the spark plug and clean the electrodes as necessary with wire brush.

The spark gap should be adjusted to 0.6~0.7mm.

If a new spark plug is fitted it must be the same type as the original one.

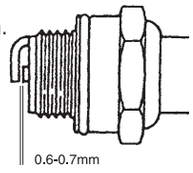

COOLING AIR INTAKE VENT

- Check the cooling air intake vent and the area around the cylinder cooling fins, and remove any waste which has attached itself to the brushcutter.
- Failing to keep the air path clear could cause the muffler to become overheated, and this in turn could cause the brushcutter to catch on fire.

GEAR CASE

- Remove the screw from the side of the gearbox.
- Remove the cutter and the inner flange to allow old grease to exit.
- Using a grease gun, supply multi-purpose grease after every 25 hours of use.

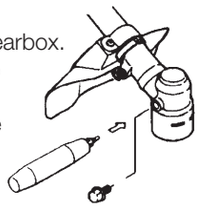

AFTER 100 HOURS USE

MUFFLER

1. Remove the muffler, insert a screwdriver into the vent, and scrape away any carbon buildup. Scrape away any carbon build-up on the muffler exhaust vent at the same time.
2. Tighten all screws, bolts, and fittings.
3. Undo the four socket screws holding the engine to the housing at the top of the main tube and check to see if any oil or grease has worked its way in between the clutch lining and drum If it has, wipe it away using oil-free, lead-free petrol.

ADJUSTING THE CARBURETTOR
A wrong adjustment may cause damage to your unit. If the engine does not run well after adjusting the carburettor, please contact your service agent.

Adjustments & service are not covered by warranty.

IDLE ADJUSTMENT SCREW

The horizontal screw (1) contacting the side of the butterfly lever arm on top of the carburettor adjusts the idling speed. If you turn right (clockwise), idle speed increases, and left (counterclockwise) it decreases. Adjust the speed if the blade continues to rotate when the engine is idling, or if the engine stops when you release the throttle lever.

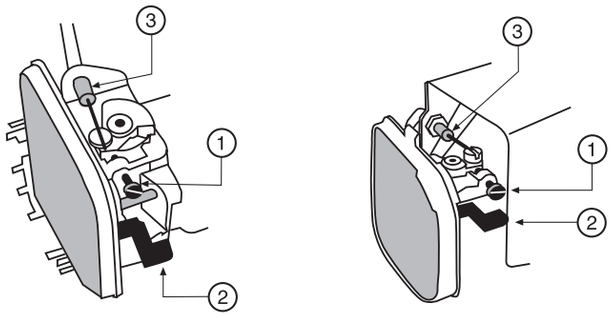

1. Idle adjustment screw
2. Choke lever
3. Throttle cable

MAINTENANCE BEFORE STORAGE

1. Clean the machine down thoroughly and inspect for any wear or damage. If you find any, have it corrected so the machine will be ready for use next time.
2. Empty the fuel from the tank. If the engine will start, run it until it stops from lack of fuel.
3. Remove the spark plug and put in 1~2 drops of 2-cycle oil in the engine. Pull the starter rope 2~3 times and then replace the
4. spark plug.
5. Apply anti-rust oil to the metal parts such as the throttle wire, put the cover on the blade, and store it indoors, avoiding dampness.

SPECIFICATIONS

	BC430	BC430ERX (EU V)
Power transmission	Automatic centrifugal clutch, spiral bevel gear, flexible drive shaft	
Max speed of gear shaft/engine speed (r/min)	7000/9000	
Idle Speed (r/min)	2800 +/-150	2800 +/-280
Vibration value at each handle	<7.5m/s^2	<6.9m/s^2
Sound pressure level (in accordance with EN ISO11806:1997, EN27917:1987)	<105(db(A))	<90(db(A))
Sound power level (in accordance with ISO 10884)	<120(db(A))	<111(db(A))
Reduction ratio	16:19	17:22
Blade rotation direction	Counter clockwise (seen from top)	
Handle type	“U” Type	
Weight (dry)	7.4	7.7
Engine model No	HB40	1E40F-2E
Certification	HB43: : CN FD G1	EU V
Type	Air cooled, 2 cycle, vertical, piston valve, petrol engine	
Displacement (ml)	42.7	42.7
Maximum output (kW/r/min)	1.25/6500	1.1kW/7500
Carburetter	Diaphragm type	
Ignition	Non contact electronic ignition	
Starting method	Recoil type	
Fuel used	Petrol mixed with lubricating oil (25:1)	
Fuel tank capacity (l)	1.1	
Dry weight	3.8	4.2
Length of main shaft (mm)	1500	
Length of inner drive shaft (mm)	1522	
Standard Blade (mm)	3 Tooth blade (255x1.4)	

RECOMMENDED CUTTER APPLICATIONS

CUTTER	APPLICATION				
DESCRIPTION	Lawn Edging	Lawn Trimming	Long Grass	Succulent Growth less than 25mm dia.	Woody Growth & Succulent Growth over than 25mm dia.
Nylon Cutter	✓	✓✓	X	X	X
3 Tooth Blade	X	X	✓✓	✓	X
*8 Tooth Blade	X	X	✓✓	✓✓	X
*80 Tooth Blade	X	X	✓	✓✓	✓✓

x = Not Suitable
✓ = Suitable
✓✓ = Most Suitable
* = Included in some models only

Morrison, a division of Masport Limited
320 Ti Rakau Drive,
East Tamaki, Auckland 2013,
New Zealand
P: 0800 627 767

Masport Australia Pty Limited
27 Commercial Drive
Dandenong South, VIC 3175
Australia
P: 1300 366 225

Copyright© Morrison

MORRISON®